IHO International Hydrographic Organization

S-100 Validation Tests sub group

2nd VTC Meeting

6th July 2023

IHO

International Hydrographic Organization

MEETING PROTOCOL

Meeting participants are kindly requested to note the following meeting protocols;

- Please keep your camera and microphone turned **“off”** if you are not talking or presenting
- If you want to make an intervention, **please turn your camera and microphone on and, raise your hand** to indicate that you wish to speak
- Don’t forget to turn your microphone **“on”** before speaking, and **“off”** when finished
- Please use the **“Chat”** function to communicate an text information to the meeting
- If you have any problems connecting using Firefox or other browser – please try using Chrome.

IHO

International Hydrographic Organization

AGENDA

- Feedback on HSSC & S-101 PT meeting
  - Summary of HSSC decisions that affect group (June 2023)
  - Summary of side meeting at S-101 PT (June 2023)
- Review of feedback on IIC Validation Tests
- Discussion on initial review of S-101 proposed level tests
- Initial tests Part1, Part 2, Part 4b, Part 6, Part 17
- Discussion on Issues raised
  - Issue 6
- Status on tasks
- Next meetings

HSSC15 UPDATE – HELSINKI, JUNE 2023

- S-158 – this has been provisionally held, but not allocated
  - Not yet determined what is the holding place for S-100 Validation tests

- DQWG – there was a question over one the DQWG tasks

S-100 Validation and DQ

- A new task to link DQ checks (S-100 generic and products-specific) to DQ measures has been identified by DQWG18.
- DQWG will provide feedback with comments and recommendations on the DQ requirements in S-100 validation checks to S-100WG and S-1xx PTs.

- ENC WG offered to provide support from S-58 sub WG and collaboration
  - Potentially hold side meeting/early morning meeting at ENC WG/S-101 PT

INFORMAL SESSION AT S-101 PT10, BREST – JUNE 2023

International Hydrographic Organization

- Reviewed IIC posted checks (next slide)

SCOPE:
1st phase - Dataset and catalogue
2nd phase – Service levels, S-128
3rd phase – data of multiple types - or is this S-98?

- Proposed hierarchy of test
  - Product Specification Tests
  - S-100 Validation Tests
  - Interoperability Tests

- Suggestion to have a cross check across Product Spec Validation tests
  - Is this something we want to proceed with?
    - If yes – when? Potentially start after S-100WG 9
    - Dependent on being provided access to Validation Tests

- Recommendation to involve Inland ENCs – contacted Chair and asked for them to participate in session on Validation S-100 WG9 meeting.

IHO

International Hydrographic Organization

FEEDBACK ON INITIAL IIC TESTS

- Too specific
- ECDIS focused
- Some of the tests were potentially Prod Spec level tests
- Need to think about purpose of the test
- Format specific tests – consensus seems to be not to include at S-100 level but then are Prod Specs aware they need to cover them?

IHO

International Hydrographic Organization

DATASET COVERAGE AND DATUMS

Question over whether the inputs section was sufficient

Do we need to add Errors to the Classification? - just C & W now

Category	Description	Inputs	Products	Classification
Dataset Coverage and Datums				
	Spatial limits must match CATALOG.XML	Dataset / CATALOG.XML	All	C
	Temporal limits must match CATALOG.xml	Dataset / CATALOG.XML	All	C
	Temporal limits start must be before temporal limits end	CATALOG.XML	All	C
	Spatial limits must be well defined polygon(s)	CATALOG.XML	All	C
	Horizontal Datum must be WGS84. horizontalDatumValue = 4326 and horizontalDatumReference = “EPSG”	Dataset	All	C

Temporal limits, where is that covered at the moment?

Horizontal datum must be stated in the PS, is this too specific for S-100 level?

IHO

International Hydrographic Organization

DATA VALUES

Data Values	Depth must be negative up	Dataset	S-102	C
	All depth values must be Real numbers	Datset	S-102	C
	All Water Level values must be real numbers	Dataset	S-104	C
	All Current speed numbers for Current Speed shall be real numbers. All trend indicators shall be integers, 1, 2 or 3	Dataset	S-104	C
	-90.0°<gridOriginLatitude<90.0° and -180.0°<gridOriginLongitude<180.0°	Dataset	All	C

Category	Description	Inputs	Products	Classification
	Trend should be in the correct direction (i.e. values following trend up should be >= to values and trend down should be <= to values). Trend values must validate against the following formulas. 1. Decreasing: trend <= -*waterLevelTrendThreshold* 2. Increasing: trend >= +*waterLevelTrendThreshold* 3. Steady: -*waterLevelTrendThreshold* < trend < +*waterLevelTrendThreshold*	Dataset	S-104	W
	typeOfWaterLevelData=2,3 or 5. Only predictions (astronomical, hybrid or hydrodynamic forecasts are suitable/useful for ECDIS). Others will be ignored			W
	Current direction must be >=0.0 and <360.0	Dataset	S-104	C
	Reserved names for groups. Must be Group_NNN	Dataset	All	C
	All data points must be valid values within ranges in dataset metadata. maxDatasetCurrentSpeed shall not be exceeded. No data values < minDatasetCurrentSpeed	Dataset	S-111	W
	Number of null speed values must be equal to number of null values in the direction grid.	Dataset	S-111	C

Too specific, need to be more generic

Depth values – real numbers
Attribute values must conform to feature type and catalogue
- perhaps have check cell attribute conforms? (Frank)

Anything to do with FC and bindings to relationship types. Analysis software can check against FC and binding is valid.

Need to involve Inland ENCs?

Where have a numeric range can be specified in FC no S-100

Reserved names – Group NNN – HDF5, should this be for all rasters or just… (S-102?)

COVERAGE

International Hydrographic Organization

Coverage	Dataset coverage must not overlap (temporal and spatial)	>1 Dataset , CATALOG.XML, S-128 (service)	All	C

Dataset checks and corresponding check and service level checks – will need S-128

GRID STRUCTURE

International Hydrographic Org

Grid Structure				
	Well defined grid	**Dataset**	**All**	**C**
	All grid dimensions > 0	**Dataset**	**All**	**C**

Category	**Description**	**Inputs**	**Products**	**Classification**
	Grid Completeness. All grid points must have a valid value or noData value	**Dataset**	**All**	**C**
	Grid Consistency. Correct number of values per row/column. Number of values in data must equal numPointsLongitudinal and numPointsLatitudinal from dataset metadata.			**C**
	Calculated grid from gridSpacing, numRows and numCols must not be outside defined coverage in metadata. *Longitude Limit = GridOriginLongitude + (NumCol-1) * (gridSpacingLongitudinal).* [from S-111 Eqn. 4.1] *Latitude Limit = GridOriginLatitude + (NumRow-1)(gridSpacingLatitudinal).* [from S-111 Eqn 4.2]	**Dataset**	**All**	**C**
	Calculated grid coverage shall not cross +/-180.0° longitude nor exceed +/- 90.0° latitude	**Dataset**	**S-104 / S-111**	**C**
	Regular Grid only is allowed for S-100 ECDIS (currently). S100_GridCoverage type (b) (Table 4.1). This is dataCodingFormat=2 in the dataset metadata.	**Dataset**	**S-102, S-104**	**C**
	interpolationType shall always be nearestNeighbour (see notes)	**Dataset**	**S-102/S-104**	**W**
	timepoint shall always be after issueDate	**Dataset**	**S-104,**	

Is this HDF5 encoding?

Questions about whether format specific checks should be a this level – if not here where?

Is interpolation constrained in the PS?

Timepoint was questioned

IHO

International Hydrographic Organization

RESOLUTION

Resolution				
	Maximum Resolution (See notes)	Dataset vs Dataset	(S-102/S-104) and S-101	C
	Minimum Resolution (See notes)	Dataset vs Dataset	(S-102/S-104) and S-101	C

DATASET METADATA

International Hydrographic Organization

Dataset Metadata				
	(Unmatched fields between CATALOG.XML and Dataset)			

Category	Description	Inputs	Products	Classification
	Issue Date and issueTime in future in CATALOG.XML. This should match issueDate and issueTime in dataset header metadata.	Dataset	All	C
	Invalid feature code (10c-8)	Dataset	All	C
	uom.name or name doesn't match feature catalogue.	Dataset	All	C
	Invalid HDF5 datatype	Dataset	All	C
	Non strings in the feature description	Dataset	All	C
	Not all feature codes described.	Dataset	All	C
	Missing feature descriptions	Dataset	All	C
	Negative time interval	Dataset	All	C
	Times outside time of earliest values and time of latest value	Dataset	All	C
	numGrp shall be equal to the number of Groups in the HDF file.	Dataset	All	C

Metadata – both encoding and XC to this slide

CROSS VALIDATION

Dataset vs dataset could this be 'within'?

Think about purpose of tests

Cross Validation				
	Vertical Datum/Sounding Datum must be the same in areas of overlapping coverage or WLA/USSC can not be computed.	Dataset vs Dataset	S-101, S-102, S-104	C
	S-102 depth values (excluding noData, defined by bounding rectangle) shall only spatially intersect the following Group 1 features (S-101): 1. Depth Area 2. Dredged Area	Dataset vs Dataset	S-102/S-101	C
	S-102 values within defining bounding box should not be shoaler than 1. DepthArea.DepthRangeMinimumValue (any feature as specified by feature catalogue) 2. Sounding depth value (ZCOO/COMFZ)	Dataset vs Dataset	S-102/S-101	C

Focus on S-58 – not sure if this was focus more or focus less!

S-102 shall only dissect node

Category	Description	Inputs	Products	Classification
	3. ValueOfSounding (any feature with valueOfSounding in S-101 feature catalogue)			
	Where polygons with depth attribution (S-101) are not enclosed by S-104 coverage WLA can not be calculated. See S-98 Annex C	Dataset vs Dataset	S-101 / S-104	W
	Where polygons with depth attribution (S-101) are not enclosed by S-102 coverage, user selected safety contour can not be calculated.	Dataset vs Dataset	S-101 / S-102	W
	Values in S-111 for surfaceCurrentSpeed shall not exceed the values in the spatially intersecting S-101 data for Tidal Stream flood/ebb – speedMaximum (where this value is set/non-null)	Dataset vs Dataset	S-101/S-111	W
	Depth of Current (surfaceCurrentDepth in dataset Metadata, relative to depthTypeIndex=seaSurface) must be valid. Must be within S-102/S-104, S-101 or S-101 WLA value.	Dataset vs Dataset	S-101/S-111	W
	When Water Level (S-104) is zero, for all inter-tidal locations (S-101), the current speed and direction must be zero valued (or noData) (S-111)	Dataset vs Dataset	S-101/S-104/S-111	W

Expect differences between products schema – is this a more general comment?

Remove Warning at this stage?

Is this last check correct?

PROPOSED WAY FORWARD

- Produce a set of tests from Parts of S-100 & Proposed S-101 generic S-100 tests
  - Tabulate and place on GitHub
  - Then group to comment and raise issues using Check ID in title
  - 65 tests written from Part1, Part 2, Part 4b, Part 6, Part 17

- Are these tests being produced from the perspective of ECDIS use or more generic than that?
  - Or split into ECDIS/ Non-ECDIS?

REVIEW OF S-100 PARTS

- Do we list every mandatory requirement in the S-100 UML models?
  - What about every situation that is not mandatory but if it is captured there can be only one? [0..1]
- Need assistance in collating and reviewing tests
- Naming convention proposal – have implemented in draft but may change

INITIAL REVIEW OF PROPOSED TESTS FROM S-101PT

International Hydrographic Organization

- DK has conducted an initial review
  - Need to determine where is the boundary between Prod Spec and S-100 level tests
    - Will likely need to cover in Introduction document at beginning of tests
  - Next slide has tests for discussion

  - Tests my need lifting up to S-100 level as are based on S-58 tests and are ENC focused

S-100 Validation Checks

Part	Check ID	S-100 Reference	Short Name	Detailed Description	Check Message	Replaces S-58 Check(s)	Severity	DQ Theme	Rationale/Requirement	
4	S100_4a_005	S-100 Ed. 5; 11????	InvalidDatasetName	If the filename of the dataset does not conform to the DPS.		531	C	Format Consistency		Is this not something to be addressed in each PS?
4	S100_4a_006	S-100 Ed. 5; 17-4.5	InvalidSupportFilename	If the filename of any support file provided in the exchange set does not conform to the DPS.		1015	C	Format Consistency		Is this not something to be addressed in each PS?
5	S100_5_001	S-100 Ed. 5; 5-1; 5-4.1???	ProhibitedObject	For each object which is present in the dataset but not present in the S-101 corresponding S-10x Feature Catalogue.		504, 545	C	Domain Consistency	Datasets must only contain the objects listed in the FC (feature and information types). Also need check for update consistency and how codes are defined in the dataset.	Is this not something to be addressed in each PS?
5	S100_5_002	5-A	DuplicateObject	For each object where another object has identical attribute values and identical geometry (if applicable).		67a	E	Logical Consistency	Intended to cover feature and information types.	Is this not something to be addressed in each PS?
5	S100_5_003	5-A	ProhibitedGeometry	For each object which is present in the dataset which references a geometry which is not permitted in the S-XXX Feature Catalogue. (includes no geometry)		12, 20a, 1797	C	Conceptual Consistency	Feature types must only have the permitted geometric primitives. (noGeometry is a valid option for this check)	Is this not something to be addressed in each PS?
5	S100_5_004	5-A	ProhibitedAttribute	For each attribute present in the dataset which is not present in the S-101 corresponding S-10x FC.		511, 546, 547, 1567+various	C	Conceptual Consistency	Attributes present in the dataset must be present in the FC, includes simple and complex.	Is this not something to be addressed in each PS?
5	S100_5_005	S-100 Ed. 5; 5-4.2.5.1; Appendix 2a-A	InvalidAttributeBinding	For each attribute binding which is either not present in the S-101FC or does not conform to the multiplicity of the attribute binding.		8, 507, 547, 1679	C	Domain Consistency	Objects present in the dataset must only have attributes permitted in the Feature Catalogue. Also must only have the permitted multiplicity of attribute instances.	Is this not something to be addressed in each PS?
5	S100_5_006	S-100 Ed. 5; 10a-4	ProhibitedAttributeValue	Check that all attributes only contain the values permitted for that object within the S-101 Feature Catalogue.		2000	C	Domain Consistency	Attributes present must only contain permitted values.	Is this not something to be addressed in each PS?
5	S100_5_007	S-100 Ed. 5; 10a-4	AttributeFormat	Check that all attributes conform to the format defined for the attribute value type specified in the S-XXX Feature Catalogue.		26b, 73a, 73b, 512, 551a, 551b, 1515a, 1515b, 1517	C	Domain Consistency	Attribute values must be in the correct format. Noting 551a and 551b needs to cover the delete and formatting characters.	Is this not something to be addressed in each PS?
6	S100_6_001	S-100 Ed. 5; 6-4.2	InvalidHorizontalCRS	If the horizontal CRS of the dataset is not equal to the value(s) specified in the DPS.		523	C	Conceptual Consistency	All geospatial datasets must have at least a horizontal coordinate reference system defined.	Is this not something to be addressed in each PS?
6	S100_6_002	S-100 Ed. 5; 6-4.2	InvalidVerticalCRS	If the vertical CRS(s) of the dataset are not equal to the value(s) specified in the DPS.		1504a, 1510a	C	Conceptual Consistency		Is this not something to be addressed in each PS?

IHO

International Hydrographic Organization

NAMING CONVENTION OF TESTS

Issue 6 on GitHub https://github.com/iho-ohi/S-100-Validation-Checks/issues/6

FrankHippmann commented 3 days ago

Some of the draft checks already contain check identifiers. I favour the format:

S100_4a_001

It would be great if all checks at the S-100 and product specification level could use the same format, or at least a uniform format. I also recommend that check identifiers do not get re-assigned with different iterations, even if this means that eventually we will get gaps in the identifier sequence, e.g. S100_4a_013, S100_4a_017, S100_4a_020, etc. Having consistent and immutable check identifiers will make the maintenance of validation software a lot less complex and less error prone.

I do not like the Pascal case "Short Name", e.g. CatalogStructure. For one, we should only have one official unique identifier. I prefer a "Short Description", e.g, "Check the Catalogue structure.", and/or a "Check Message", e.g., "The Catalogue structure is invalid."

rmalyankar commented 5 hours ago

A uniform core framework works better, formats other than ISO 8211 will require format-specific elements to describe checks.

Short descriptions may have to be duplicated, for example the catalog structure could be invalid in different ways.

IHO

International Hydrographic Organization

DELIVERABLE – NOV 2023

- Initial list of high level checks
  - Can be expanded upon afterwards

- Document write up with an initial explanation of ‘what is S-100 level validation’

International Hydrographic Organization

IHO WORK PLAN

ID	Task	Further Information	Who	Start Date	End date	Status
	1. Collate information an prepare Valdation Tests					
1.1	Establish GitHub page		Yong/ Liz			COMPLETE
1.2	Contact Test Bed owners for input	SHOM/UKHO, KHOA & NO contacted. EU InterReg Project due to begin in 2023 - SE are leads (DK are members)	Liz	01-04-2023	06-07-2023	COMPLETE
1.3	Contact DQWG for involvement	Chair contacted and agrees there is cross over between groups. Hopes to attend September VTC	Liz	01-04-2023	06-07-2023	COMPLETE
1.4	Contact relevant PS owners	Contacted S-102, S-104, S-111, S-124, NIPWG generally, S-401 for information.	Liz	01-04-2023	06-07-2023	COMPLETE
1.5	Contact Validation Software Manufacturers	Closing action as the software manufacturers are members of this group. If they have information to share please upload to GitHub or contact Liz & Yong	Liz	01-04-2023	06-07-2023	CLOSED
1.6	Produce Work Plan	Work plan produced and will maintain	Liz	01-04-2023	06-07-2023	COMPLETE
1.7	Raise awareness of this group	Members to raise awareness of this group when attending technical meetings	ALL	01-04-2023	ONGOING	IN PROGRESS
1.8	Review S-101 Proposed S-100 level tests	Uploaded to GitHub page. Need review for determing if should be carried forward to S-100 Validation tests and if need rewording. DK have begun an initial review	ALL	01-07-2023		IN PROGRESS
1.9	Review S-129 Validation tests	Uploaded to GitHub page. Need review for determing if should be carried forward to S-100 Validation tests and if need rewording	ALL	01-07-2023	01-11-2023	PLANNED
1.10	Review S-124 Validation tests	Contacted chair for access to tests	ALL	01-07-2023	TBD	PLANNED
1.11	Review S-104 Validation tests	Contacted chair for access to tests. Checks are on Registry need to contact for permission to post on GitHub page	Liz/All	01-07-2023	01-11-2023	PLANNED
1.12	Review S-102 Validation tests	Contacted chair for access to tests	ALL	01-07-2023	TBD	PLANNED
1.13	Determine naming convention for tests	Intial proposal submitted - Issue 6 on GitHub. Group to review and comment on for agreement by next VTC in September	ALL	01-07-2023	01-09-2023	IN PROGRESS
1.14	Agree categorisation of Validation tests		ALL	01-07-2023	01-11-2023	PLANNED
1.15	Agree structure of Validation tests		ALL	01-07-2023	01-11-2023	PLANNED
1.16	Review relevant DQWG documentation	Identify and review relevant DQWG documentation	Liz initially to identify Group to review	01-04-2023	01-09-2023	PLANNED
1.17	Review S-100 Parts for S-100 level Validation tests	Initial review has begun - Parts 1, 2, 6, 4b, 17 intially reviewed and posted for comment	ALL	01-04-2023	01-11-2023	IN PROGRESS
1.18	Develop cross check of PS validation tests to S-100 to identify gaps	This was proposed at S-101 PT meeting. Is this something we want to progress. Perhaps activity for after initial delivery at S-100 WG9. Potential collaboration with DQWG?	ALL	TBD	TBD	TO BE DETERMINED
1.19	Update Validation Diagram	Diagram initially produced for S-100 WG8. Group questionned relevance of diagram at VTC1, so work is on hold. Will reopen if required.	N/A	N/A	N/A	*ON HOLD*
1.20	Update table outlining different types of Validation and who is responsible for them	Table initially produced for S-100 WG8. Group questionned relevance of diagram at VTC1, so work is on hold. Will reopen if required. May be needed for Introduction section to S-100 Validation Tests.	N/A	N/A	N/A	*ON HOLD*
1.21	Produce a data flow diagram showing where valdiation takes place	Deemed not priority at this point due to resources available. Will reopen if required.	N/A	N/A	N/A	*ON HOLD*
1.22	Produce a timeline	Deemed not priority at this point due to resources available. Will reopen if required.	N/A	N/A	N/A	*ON HOLD*
	2. Prepare draft delivery to S-100 WG9					
2.1	Produce wording for introduction to document on S-100 Validation				01-11-2023	PLANNED
2.2	Draft Initial S-100 Validation tests focused on first phase S-100 deliveries				01-11-2023	PLANNED

IHO

International Hydrographic Organization

NEXT STEPS

- Review Issue 6 and comment ahead of next VTC in GitHub. Want to agree naming convention at that meeting.

- Continue to review S-100 Parts
  - Volunteers to write tests?

- Review new S-100 validation tests that are posted – if have comments, create an issue with the Check ID in the Issue name.
  - Not just content, also categorization and structure of tests
  - When raise an Issue need to be clear on what is needed to close it

- Review posted PS Validation tests – S-101 & S-129

  (be aware 'S-101 proposed S-100 Validation tests' & 'S-100 Validation Tests' are using same naming convention)

- Identify and post links to DQWG relevant documents for review

https://github.com/iho-ohi

IHO

International Hydrographic Organization

NEXT MEETINGS

- Early September VTC
  - Thursday 7th September is proposed date, to avoid clash with NIPWG.
  - Proposed new time slots (19 in Europe, 3 in Australia, 3 east coast US, 5/6 west coast US)
    - 15:00 – 17:00 (CEST) – 6:00 California, 9:00 Washington, 21:00 Beijing, 23:00 Sydney
    - 19:00 – 21:00 (CEST) – 10:00 California, 13:00 Washington, 01:00 Beijing, 03:00 Sydney
- End September ENC WG/S-101PT WG meeting - Lombok, Indonesia 25-
  - Hold side meeting/early morning meeting
- November S-100 WG 8 meeting – Singapore 13-17th November
  - Do we want to hold a VTC meeting prior to that meeting? In the first week of November or end of October?

IHO

International
Hydrographic
Organization

Any Questions?

INITIAL REVIEW OF PROPOSED TESTS FROM S-101PT

- Invalid Dataset Names
  - The filename of the dataset does not conform to the DPS
  - The filename of the support file does not conform to the DPS

- Prohibited Object/Geometry/Attribute
  - For each object that is present in the dataset but not present in the FC
  - For each object that is present in the dataset which references geometry which is not permitted in the FC (includes no geometry)
  - For each attribute that is present in the dataset which is not present in the FC
  - All attributes only contain the values permitted for that object within the FC

INITIAL REVIEW OF PROPOSED TESTS FROM S-101PT

- Duplicate Object
  - For each object where another object has identical attribute values and identical geometry
- Invalid Attribute Binding
  - For each attribute binding which is either not present in the FC or does not conform to the multiplicity of the attribute binding
- Attribute Format
  - All attributes conform to the format defined for the attribute value type specified in the FC
- Invalid Horizontal/Vertical CRS
  - If the horizontal/vertical CRS of the dataset is not equal to the value specified in the DPS

BACKGROUND – S-100 WG7 WORKSHOP

International Hydrographic Organization

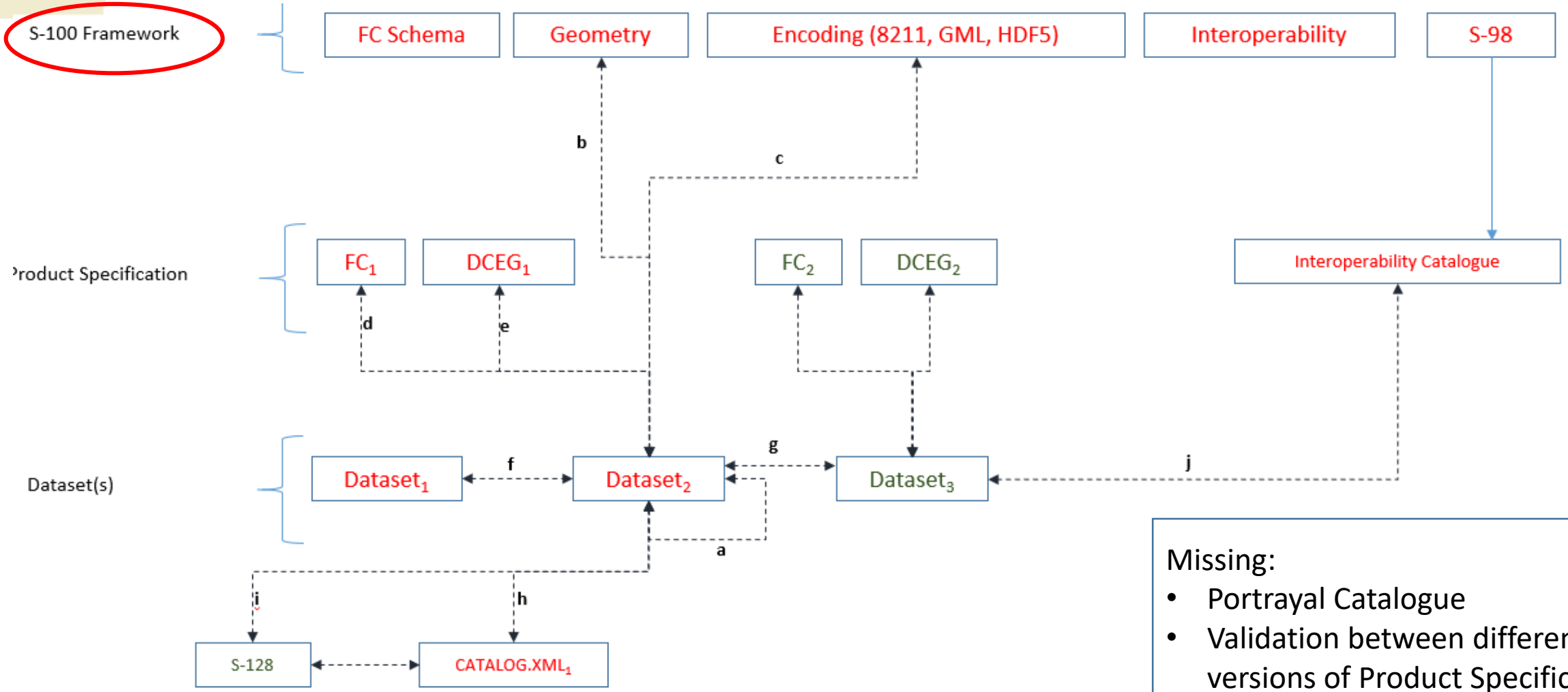

Missing:

- Portrayal Catalogue
- Validation between different versions of Product Specifications

IHO

International Hydrographic Organization

BACKGROUND – S-100 WG7 WORKSHOP

Validation	Against	Who?	Notes / Examples
a	Dataset against itself	Data Producer	Incorrect ordering of features
b	S-100 Geometry Schema	Data Producer	Things which contravene the geometry model, e.g clockwise/anticlockwise rings, unused curves
c	S-100 Encoding (Part 10a, b or c)	Data Producer	Formatting problem with encodings, corrupt ISO8211, non-conformant GML, incorrect HDF5 group names, incorrectly formatted attributes (e.g. dates, Booleans or unknowns), bad filenames
d	Product Specification Feature Catalogue	Data Producer	Names of attributes or features which aren't in the feature catalogue. Missing mandatory attribution
e	Product Specification DCEG		Bad combination of attributes
f	Against other datasets of the same type	Aggregator	Horizontal/vertical consistency
g	Datasets of a different type	Aggregator	e.g. S-102 depths shoaler than S-101 depths
h	Part 17 Catalogue (and Part 15)	Aggregator	Bad digital signatures, coverage of dataset doesn't match coverage in catalogue, incorrect encoding or mismatch of producer code
i	Corresponding S-128	Distributor?	Mismatch of coverage or dataset name.
j	Against interoperability catalogue	Producer	Incomplete substituted layer (L2), mismatch of positions (L1)

Responsibilities:

- Who writes & maintains the different types of validation

Aggregator = RENC/VAR/Distributor. Potentially change to Service Provider

PROPOSED STRUCTURE FOR TESTS

International Hydrographic Organization

5 Initial register of tests.

This is an initial register of tests compiled using individual product specifications, and mapping between features in different product specifications. The column headings are as follows:

1. Category. The broad area of functionality the test refers to
2. Description. Description of the conditions the test is attempting to capture.
3. Inputs. Whether tests are designed to be run on single datasets or between datasets of different type/product.
4. Products. Which products the test is focused on
5. Classification "C" – critical, "W" – warning. A draft classification based on possible user/ECDIS impacts.

Category	Description	Inputs	Products	Classification
Dataset Coverage and Datums				
	Spatial limits must match CATALOG.XML	Dataset / CATALOG.XML	All	C
	Temporal limits must match CATALOG.xml	Dataset / CATALOG.XML	All	C
	Temporal limits start must be before temporal limits end	CATALOG.XML	All	C
	Spatial limits must be well defined polygon(s)	CATALOG.XML	All	C
	Horizontal Datum must be WGS84. horizontalDatumValue = 4326 and horizontalDatumReference = "EPSG"	Dataset	All	C
Data Values	Depth must be negative up	Dataset	S-102	C
	All depth values must be Real numbers	Datset	S-102	C
	All Water Level values must be real numbers	Dataset	S-104	C
	All Current speed numbers for Current Speed shall be real numbers. All trend indicators shall be integers, 1, 2 or 3	Dataset	S-104	C
	-90.0°<gridOriginLatitude<90.0° and -180.0°<gridOriginLongitude<180.0°	Dataset	All	C

Propose adding Standard/document to refer to

Categories:
Dataset Coverage and Datums
Data Values
Coverage
Grid Structure
Resolution
Dataset Metadata
Cross Validation

IHO

International Hydrographic Organization